WxS9900-319221

NB-IOT Limit Switch Smart Sensor & RTU 2-in-1 Terminal(Honeywell)

Product Highlights

- NB-IOT Limit Switch Smart Sensor & RTU 2-in-1 Terminal(Honeywell)
- 2-in-1 smart sensor(s) and RTU terminal product
- Optional DC 5V/DC 12V power supply
- Optional Battery power supply (ER34615H 19,000mAh/ER34615M 13,500mAh)
- Normally open/closed status can be monitored, alarm can be triggered, high mechanical strength, applicable to outdoor environment
- Expandable with 2 of 14 types PSS gas sensors with aluminum sleeve enclosure
- Up to 8 working simultaneously including sensors and controllers; Customization needed if more than 8 working at the same time
- RTU controlling signal and interfaces OD/PWR triggered by sensor(s) data or OTA command for solenoid valve or other devices
- Optional (Public/Private) IoT cloud platform PolySuite iView

Products includes following parts:

- WxS9900 NB-IOT Smart IoT and RTU 2-in-1 Terminal
- ENC-102001 WxS Series 4.0 Enclosure(Φ 145x90x55mm, IP67)
- PSS-319221 Limit Switch Sensor (Honeywell)

Configuration Tool

- iEdge4.0 WxS IoT Terminal products can be configured with PolySuite software-visual based Configuration Tool or CLI interface command or OTA via IoT platform, such as PolySuite PaaS platform iView.
- Download link http://ota.polysense.online/wincc/ConfigurationTool.rar

Product Image

- The shell is WxS Series 4.0 Enclosure(Φ 145x90x55mm, IP67) , as shown in the figure below
- The sensor is externally connected. See the following document PSS-319221 for the sensor picture

Polysense
Polysense

WxS9900

NB-IoT Smart IoT and RTU 2-in-1 Terminal

Related Products

Product #	Interf.	Descriptions
WxS9900	11MPI+RS485+OD*2+PWR*2	NB-IoT Smart IoT and RTU 2-in-1 Terminal (Inc.WxS99xx,PSM-xx00,PSB-BD01,Enclosure)
WxS9901	RS485+OD*2+PWR*2	NB-IoT Smart IoT and RTU 2-in-1 Terminal (Inc.WxS99xx,PSM-xx01,PSB-BD01,Enclosure)
WxS9902	0-20mA*1+OD*2+PWR*2	NB-IoT Smart IoT and RTU 2-in-1 Terminal (Inc.WxS99xx,PSM-xx02,PSB-BD01,Enclosure)
WxS9903	0-20mA*4+OD*2+PWR*2	NB-IoT Smart IoT and RTU 2-in-1 Terminal (Inc.WxS99xx,PSM-xx03,PSB-BD01,Enclosure)
WxS9904	0-3.3V*2+OD*2+PWR*2	NB-IoT Smart IoT and RTU 2-in-1 Terminal (Inc.WxS99xx,PSM-xx04,PSB-BD01,Enclosure)
WxS9905	0-3.3V*4+OD*2+PWR*2	NB-IoT Smart IoT and RTU 2-in-1 Terminal (Inc.WxS99xx,PSM-xx05,PSB-BD01,Enclosure)
WxS9906	0-10V*2+OD*2+PWR*2	NB-IoT Smart IoT and RTU 2-in-1 Terminal (Inc.WxS99xx,PSM-xx06,PSB-BD01,Enclosure)
WxS9907	0-10V*4+OD*2+PWR*2	NB-IoT Smart IoT and RTU 2-in-1 Terminal (Inc.WxS99xx,PSM-xx07,PSB-BD01,Enclosure)
WxS9908	PT100*1+OD*2+PWR*2	NB-IoT Smart IoT and RTU 2-in-1 Terminal (Inc.WxS99xx,PSM-xx08,PSB-BD01,Enclosure)
WxS9909	PT100*5+OD*2+PWR*2	NB-IoT Smart IoT and RTU 2-in-1 Terminal (Inc.WxS99xx,PSM-xx09,PSB-BD01,Enclosure)
WxS990A	Switch*1+OD*2+PWR*2	NB-IoT Smart IoT and RTU 2-in-1 Terminal (Inc.WxS99xx,PSM-xx0A,PSB-BD01,Enclosure)
WxS990B	Switch*5+OD*2+PWR*2	NB-IoT Smart IoT and RTU 2-in-1 Terminal (Inc.WxS99xx,PSM-xx0B,PSB-BD01,Enclosure)
WxS990C	Unibus*1+OD*2+PWR*2	NB-IoT Smart IoT and RTU 2-in-1 Terminal (Inc.WxS99xx,PSM-xx0C,PSB-BD01,Enclosure)
WxS990D	Unibus*18+OD*2+PWR*2	NB-IoT Smart IoT and RTU 2-in-1 Terminal (Inc.WxS99xx,PSM-xx0D,PSB-BD01,Enclosure)
WxS990E	IIC*1+OD*2+PWR*2	NB-IoT Smart IoT and RTU 2-in-1 Terminal (Inc.WxS99xx,PSM-xx0E,PSB-BD01,Enclosure)
WxS990F	SPI*1+OD*2+PWR*2	NB-IoT Smart IoT and RTU 2-in-1 Terminal (Inc.WxS99xx,PSM-xx0F,PSB-BD01,Enclosure)
WxS990G	Uart*2+OD*2+PWR*2	NB-IoT Smart IoT and RTU 2-in-1 Terminal (Inc.WxS99xx,PSM-xx0G,PSB-BD01,Enclosure)
WxS990H	Uart*3+OD*2+PWR*2	NB-IoT Smart IoT and RTU 2-in-1 Terminal (Inc.WxS99xx,PSM-xx0H,PSB-BD01,Enclosure)
WxS990J	Uart*1+RS485+OD*2+PWR*2	NB-IoT Smart IoT and RTU 2-in-1 Terminal (Inc.WxS99xx,PSM-xx0J,PSB-BD01,Enclosure)
WxS9950	Ai/Ao/Di/Pi/Ro/IIC/SPI/Ci + RS232/485/Ro/RJ45	NB-IoT Smart RTU

Product Highlights

- Interfaces supported:
  - MPI:(AIN(0-20mA)*2, PT100*1, VIN(0-10V/0-3.3V)*2, Switch*1 ,Unibus*1, IIC *1， SPI*1, Uart(3.3V TTL)*2), RS485*1
  - RTU interfaces
    - OD*2 output for external devices controlling
    - PWR*2 output for external devices/sensors power supply or customization usage
- 2-in-1 DC(5V/12V)+Battery(3.6V Li-SOCl2 ER34615H/M) Power Supply, DC in priority
- Up to 8 working simultaneously including sensors and controllers; Customization needed if more than 8 working at the same time
- Built-in sensor options including:
  - PSS-403011 IIC Temperature and Humidity Sensor (Indoor)
  - PSS-403012 RS485 Temperature and Humidity Sensor (Indoor)
  - PSS-403013 IIC Temperature and Humidity Sensor (IP67,Outdoor)
  - PSS-403014 RS485 Temperature and Humidity Sensor (IP67,Outdoor)
  - PSS-403015 IIC Temperature and Humidity Sensors (Indoor)

- PSS-403016 RS485 Temperature and Humidity Sensors (Indoor)
- PSS-403017 IIC Temperature and Humidity Sensors (IP67,Outdoor)
- PSS-403018 RS485 Temperature and Humidity Sensors (IP67,Outdoor)
- PSS-403019 IIC Temperature and Humidity Sensors (Indoor)
- PSS-40301A RS485 Temperature and Humidity Sensors (Indoor)
- PSS-40301B IIC Temperature and Humidity Sensors (IP67,Outdoor)
- PSS-40301C RS485 Temperature and Humidity Sensors (IP67,Outdoor)
- PSS-403021 IIC Temperature + Humidity + Barometric Pressure Sensors(Indoor)
- PSS-403022 RS485 Temperature + Humidity + Barometric Pressure Sensors(Indoor)
- PSS-403023 IIC Temperature + Humidity + Barometric Pressure Sensors (IP67,Outdoor)
- PSS-403024 RS485 Temperature + Humidity + Barometric Pressure Sensors (IP67,Outdoor)
- PSS-33B011 RS485 illumination Sensor(Indoor)
- PSS-423011 Uart AQI(PM2.5/10, SO2,NO2, O3, CO,Temp,Humidity) PPM Level Sensors
- PSS-423031 Uart IAQ(PM2.5/10, CO2, HCHO, Temp,Humidity) Sensors
- PSS-423041 Uart IAQ(PM2.5/10, CO2, TVOC, Temp,Humidity) Sensors
- PSS-423051 Uart IAQ(PM2.5/10, CO2, HCHO, TVOC,Temp,Humidity)Sensors
- PSS-318711 Uart GPS/Beidou Positioning Sensor
- PSS-318712 RS485 GPS/Beidou Positioning Sensor
- PSS-319311 0-3.3V Tilt / Inclination Sensor (SHM- Structure Health Monitoring)
- PSS-333051 0-3.3V PIR Sensor (3-4 Meters)
- PSS-333052 0-3.3V PIR Sensor (up to 20 Meters)
- PSS-334061 0-3.3V UV Sensor (Range:0-15 grade, outdoor)
- PSS-355051 Switch Uni-Call Button & Controller
- PSS-362011 Uart Sound/Noise Sensor (30~130dB range, Indoor)
- All Gas Sensors with Product No. PSS-21xxxx

❖ Support 1-8 enclosure externally connected sensors

- All enclosure external PSS sensors w/o separate power supply

❖ RTU OD & PWR(PWM) output control inerfaces

- OD output control interface for controlling external devices such as electric relay,AC contactor, beeper, draught fan, lamps and lantern etc.
- PWR*2 output, one default for external devices/sensors power supply voltage output, one with 3.3V voltage; or customization usage,such as for PWM port
- PWR port signal can be used as PWM output to control stepper moter or lamp
- Sensor(s) data or OTA Command triggered OD/PWR controlling signal & interfaces

❖ Power supply options:

- PSB-BT01 WxS Terminal Battery Power (3.6VDC Output) (3.6V Li-SOCl2 ER34615H/M)
- PSB-BT02 WxS Terminal Battery Power Board (3/5/9/12VDC Output) (3.6V Li-SOCl2 ER34615H/M)
- PSB-DC01 WxS Terminal DC Power Board (Inc. PSP-DC012V)
- PSB-BD01 WxS Terminal Battery (3.6V Li-SOCl2 ER34615H/M) & DC Power Board(Inc. PSP-DC012V)
- Battery capacity ER34615H: 19000mAh/ER34615M: 13500mAh

- iEdge 4.0 terminal enclosure options
  - ENC-102001 WxS Series 4.0 Enclosure(ϕ145x90x55mm, IP67)
  - ENC-102002 WxS Series 4.0 Poromeric Enclosure(ϕ145x90x59mm)
  - ENC-102003 WxS Series 4.0 High Poromeric Enclosure(ϕ145x90x70mm)

- Terminal and sensor parameters configurable with Configuration Tool running on PC
  - NB-IoT Bands Supported and SW Configurable
  - NB-IoT Uplink Transmission Cycle Configurable
  - Sensor Parameters Configurable
  - Sensor Data Report Cycle Configurable

- FOTA (Over The Air) firmware upgrade, including to upgrade loader and application images
- OTA (Over The Air) terminal running parameters supported including output signal
- Low power consumption, years of battery operational life with 3.6V Li-SOCl2 ER34615H/M Battery with various scenarios
- Integrated internal antenna, or optional external SMA/IPEX antenna
- NB-IoT Compliance

Specifications

Parameters	Value
Smart Terminal	
Interfaces	MPI Interfaces-Any Mixture of Following: MPI:(AIN(0-20mA) *2, PT100 *1, VIN(0-10V/0-3.3V) *2, Switch *1 ,Unibus*1, IIC *1， SPI*1, Uart(3.3V TTL)*2), RS485*1 Output Control: OD*2 & PWR*2
Data Report	Cross-threshold report, plus periodic report (the threshold and the periodic report cycle are both user-configurable)
Intensive data sampling and averaging	Support intensive data sampling and averaging to improve data accuracy
Wireless	
Frequency band	LTE-FDD: B1/2/3/4/5/8/12/13/18/19/20/25/26(Cat M1 Only)/27(Cat M1 Only)/28/31/66/71(Cat NB2 Only)/ 72/73/85/86(Cat NB2 only)/87/88 ; EGPRS: 850/900/1800/1900MHz
Rate	LTE Cat M1:Max. 588 (DL), Max. 1119 (UL) LTE Cat NB1:Max. 32(DL), Max. 70(UL) LTE Cat NB2:Max. 127 (DL), Max. 158.5 (UL) EDGE:Max. 296 (DL), Max. 236.8 (UL) GPRS :Max. 107 (DL), Max. 85.6 (UL)
Protocols	PPP/TCP/UDP/SSL/TLS/FTP(S)/HTTP(S)/NITZ/PING/ MQTT(S)/MQTT-SN/LwM2M/CoAP(S)/IPv6/DNS/NTP
SMS	Point-to-point MO and MT/SMS Cell Broadcast/Text and PDU Mode
Current consumption	3.9μA@PSM
Antenna	Integrated internal antenna or external 1/2 wavelength whip antenna

	(SMA)
Mechanical	
Dimension	3 Enclosure options with different size WxS Series 4.0 Enclosure(ϕ145x90x55mm, IP67) WxS Series 4.0 Poromeric Enclosure(ϕ145x90x59mm) WxS Series 4.0 High Poromeric Enclosure(ϕ145x90x70mm)
IP rating	IP65 & IP67
Operating Temperature	-40C to +85C
Total Weight	150 g
Electrical	
Supply Voltage	3.6VDC
Power Type	Replaceable 1 ER34615H/M 3.6V Li-SOCI2 Battery (H/M); DC 4.5V – 12V optional

Configuration Tool

- iEdge4.0 WxS IoT Terminal products can be configured with PolySuite software-visual based Configuration Tool or CLI interface command or OTA via IoT platform, such as PolySuite PaaS platform iView.
- Download link http://ota.polysense.online/wincc/ConfigurationTool.rar

Installation Guide

- Below diagram shows the general installation guide for WxS9900, it can be installed on any flat and solid surface:

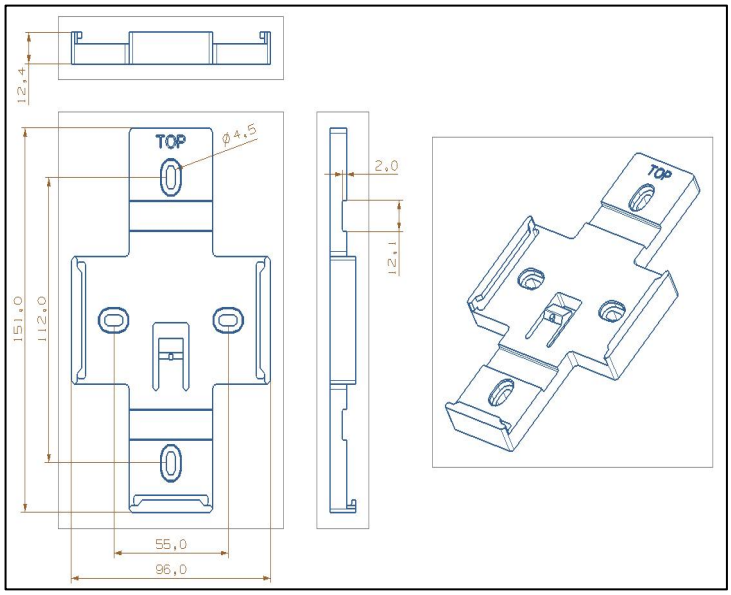

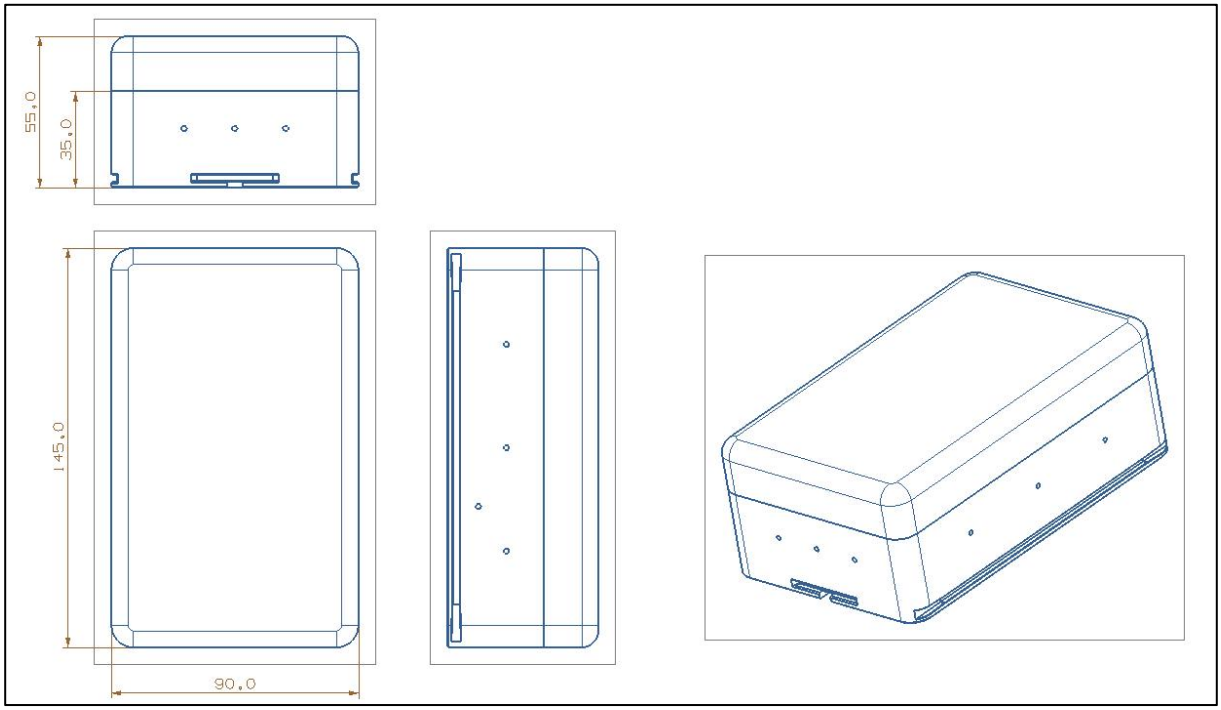
55.0
35.0
145.0
90.0

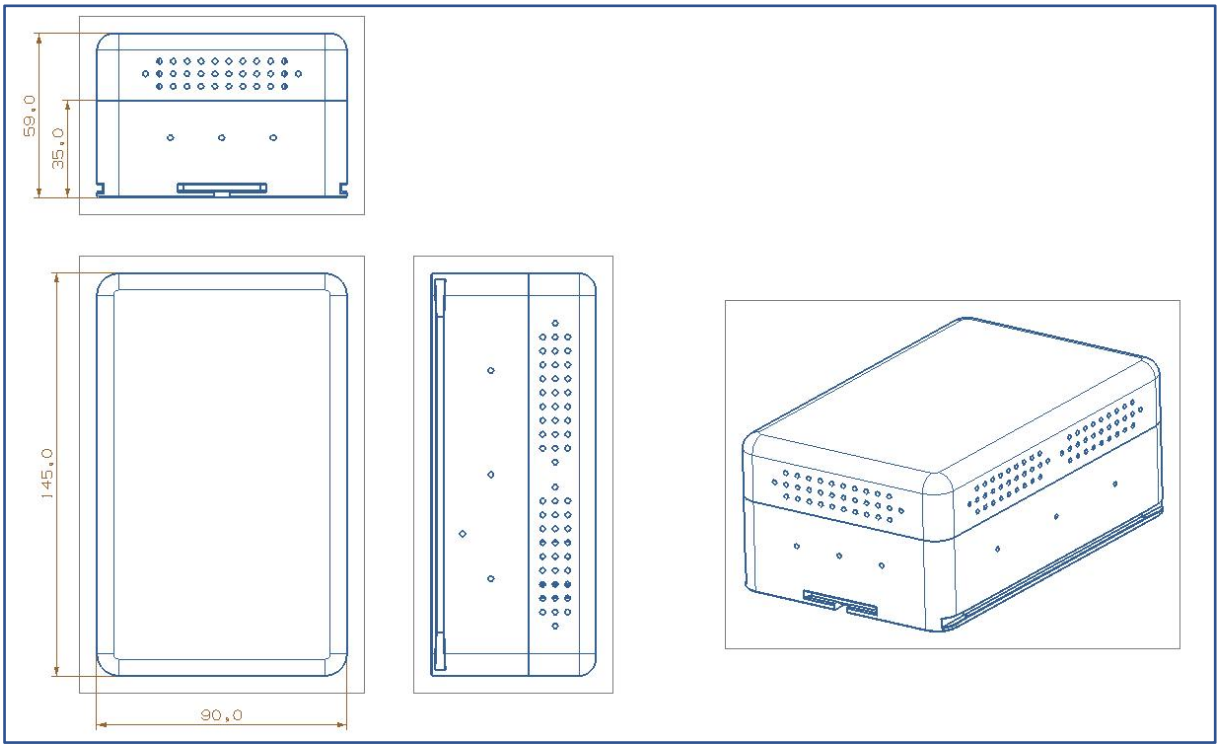
59.0
35.0
145.0
90.0

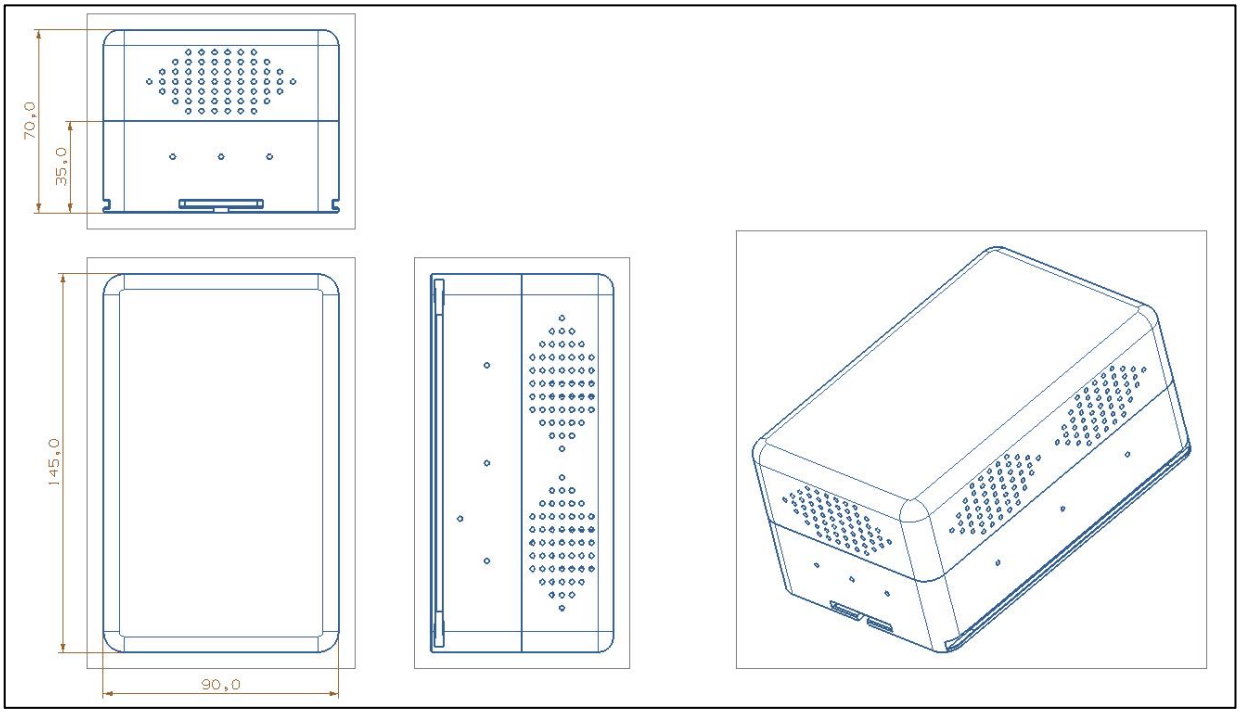

❖ Below is the recommendation of the self-tapping screw and its sizes:

螺纹规格		ST2.2	ST2.9	ST3.5	ST4.2	ST4.8	ST5.5	ST6.3
dk	min	3.7	5.3	6.64	7.64	9.14	10.57	11.57
K	min	1.4	2.15	2.35	2.8	3.4	3.7	4.3
m		1.9	3	3.9	4.4	4.9	6.4	6.9
L		4.5mm~100mm						

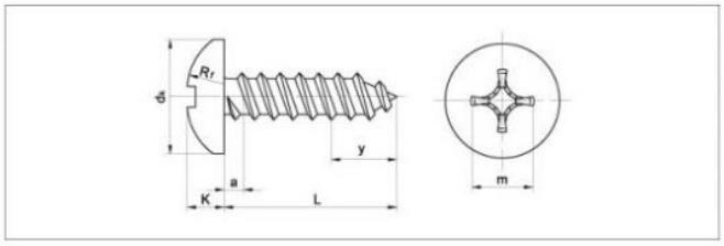

Product Images

❖ WxS Series 4.0 Enclosure(ϕ145x90x55mm, IP67)

❖ WxS Series 4.0 Poromeric Enclosure(ϕ145x90x59mm)

❖ WxS Series 4.0 High Poromeric Enclosure(Φ 145x90x70mm)

PSS-319221

Limit Switch Sensor

Product introduction

PSS-319221 Honeywell limit switches offer a wide range of actuators, electrical specifications, terminals, circuits, and seal ratings for excellent flexibility and performance. These precise snap switches are sealed in a sturdy housing for presence or absence detection in areas that allow body contact.

Detection principle

When an object is detected, the switch actuator acts, and the normally open/normally closed electrical contacts in the switch body will change state, thus realizing the on-off of the AC/DC circuit.

Product features

- Limit switch sensor
- New economical switch
- Double circuit double break electric shock line
- Cast iron housing
- Current load capacity 10A
- High mechanical strength
- Oil proof, waterproof and dust-proof structure with cable sheath
- Long mechanical life
- Impact resistant, vibration resistant, washable and suitable for outdoor environment

Product parameters

Parameters	
Operating speed	0.05mm～2m/s
Action frequency	Mechanical frequency: 120 times / min
Standard	EN 50041
Contact resistance	Maximum 25m Ω (initial value)
Breaking resistance	Minimum 100m Ω ((measured at 500VDC)
Shell material	Metal
Service life	Mechanical: 5,000,000 times (measured at maximum operating frequency)
Electrical	500,000 times (measured at rated resistance load)
Insulation	2,500V
Interface	
Output signal	Switch
Warranty	
Warranty period	1year
Material	
Working temperature	-25℃~120℃
Working humidity	Maximum 95% RH
Power	
Power	3.5-5V
Power supply type	Replaceable 3.6V Li-SOCI2 battery of ER34615 series; DC 4.5V~12V optional

Application

According to its working characteristics, it is widely used in detection of well cover opening, harbor bridge crane, CNC machine tool and other fields.

Ordering Guide

- PSS-319221 sensor is a sensor only, it needs to use with WxS terminals to combine to different product series; On the basis of the combination, multiple PSS sensors can be loaded through the Multiple Purpose Interface (MPI) of the intelligent IoT terminal.
- According to the specific scenario of use case, the enclosure and antenna of intelligent IoT terminal will be replaced to ensure the product quality and performance.
- PSS sensors can be integrated with the WxS terminal via the MPI interface to form different product series.
- Example of products are as follows:

  - WxS7800-319221 WiFi Series Limit Switch Smart Sensor & RTU 2-in-1 Terminal
  - WxS8800-319221 LoRaWAN Series Limit Switch Smart Sensor & RTU 2-in-1 Terminal
  - WxS9800-319221 NB-IoT (China) Series Limit Switch Smart Sensor & RTU 2-in-1 Terminal
  - WxS9900-319221 NB-IoT (Global) Series Limit Switch Smart Sensor & RTU 2-in-1 Terminal
  - WxSC800-319221 LTE Cat1 Series Limit Switch Smart Sensor & RTU 2-in-1 Terminal
  - WxSC900-319221 LTE Cat1 w/GPS Series Limit Switch Smart Sensor & RTU 2-in-1 Terminal
  - WxSD800-319221 LTE Cat4 Series Limit Switch Smart Sensor & RTU 2-in-1 Terminal
  - CxS1800-319221 Ethernet (RJ45) Series Limit Switch Smart Sensor & RTU 2-in-1 Terminal