# WxS7800-319211

WiFi Wind Direction Smart Sensor & RTU 2-in-1 Terminal

## Product Highlights

- WiFi Wind Direction Smart Sensor & RTU 2-in-1 Terminal
- 2-in-1 smart sensor(s) and RTU terminal product
- Optional DC 5V/DC 12V power supply
- Optional Battery power supply (ER34615H 19,000mAh/ER34615M 13,500mAh)
- 16 direction values can be monitored, and the linearity of data information is good
- Expandable with 2 of 14 types PSS gas sensors with aluminum sleeve enclosure
- Up to 8 working simultaneously including sensors and controllers; Customization needed if more than 8 working at the same time
- RTU controlling signal and interfaces OD/PWR triggered by sensor(s) data or OTA command for solenoid valve or other devices
- Optional (Public/Private) IoT cloud platform PolySuite iView

## Products includes following parts:

- WxS7800 WiFi Smart IoT and RTU 2-in-1 Terminal
- ENC-102001 WxS Series 4.0 Enclosure( Φ 145x90x55mm, IP67)
- PSS-319211 Wind Direction Sensor

## Configuration Tool

- iEdge4.0 WxS IoT Terminal products can be configured with PolySuite software-visual based Configuration Tool or CLI interface command or OTA via IoT platform, such as PolySuite PaaS platform iView.
- Download link http://ota.polysense.online/wincc/ConfigurationTool.rar

## Product Image

- The shell is WxS Series 4.0 Enclosure( Φ 145x90x55mm, IP67) , as shown in the figure below
- The sensor is externally connected. See the following document PSS-319211 for the sensor picture

Polysense
Polysense

# WxS7800

WiFi Smart IoT and RTU 2-in-1 Terminal

## Related Products

| Product # | Interf. | Descriptions |
|---|---|---|
| WxS7800 | 11MPI+RS485+OD*2+PWR*2 | WiFi Smart IoT and RTU 2-in-1 Terminal (Inc.WxS78xx,PSM-xx00,PSB-BD01,&Enclosure) |
| WxS7801 | RS485+OD*2+PWR*2 | WiFi Smart IoT and RTU 2-in-1 Terminal (Inc.WxS78xx,PSM-xx01,PSB-BD01,&Enclosure) |
| WxS7802 | 0-20mA*1+OD*2+PWR*2 | WiFi Smart IoT and RTU 2-in-1 Terminal (Inc.WxS78xx,PSM-xx02,PSB-BD01,&Enclosure) |
| WxS7803 | 0-20mA*4+OD*2+PWR*2 | WiFi Smart IoT and RTU 2-in-1 Terminal (Inc.WxS78xx,PSM-xx03,PSB-BD01,&Enclosure) |
| WxS7804 | 0-3.3V*2+OD*2+PWR*2 | WiFi Smart IoT and RTU 2-in-1 Terminal (Inc.WxS78xx,PSM-xx04,PSB-BD01,&Enclosure) |
| WxS7805 | 0-3.3V*4+OD*2+PWR*2 | WiFi Smart IoT and RTU 2-in-1 Terminal (Inc.WxS78xx,PSM-xx05,PSB-BD01,&Enclosure) |
| WxS7806 | 0-10V*2+OD*2+PWR*2 | WiFi Smart IoT and RTU 2-in-1 Terminal (Inc.WxS78xx,PSM-xx06,PSB-BD01,&Enclosure) |
| WxS7807 | 0-10V*4+OD*2+PWR*2 | WiFi Smart IoT and RTU 2-in-1 Terminal (Inc.WxS78xx,PSM-xx07,PSB-BD01,&Enclosure) |
| WxS7808 | PT100*1+OD*2+PWR*2 | WiFi Smart IoT and RTU 2-in-1 Terminal (Inc.WxS78xx,PSM-xx08,PSB-BD01,&Enclosure) |
| WxS7809 | PT100*5+OD*2+PWR*2 | WiFi Smart IoT and RTU 2-in-1 Terminal (Inc.WxS78xx,PSM-xx09,PSB-BD01,&Enclosure) |
| WxS780A | Switch*1+OD*2+PWR*2 | WiFi Smart IoT and RTU 2-in-1 Terminal (Inc.WxS78xx,PSM-xx0A,PSB-BD01,&Enclosure) |
| WxS780B | Switch*5+OD*2+PWR*2 | WiFi Smart IoT and RTU 2-in-1 Terminal (Inc.WxS78xx,PSM-xx0B,PSB-BD01,&Enclosure) |
| WxS780C | Unibus*1+OD*2+PWR*2 | WiFi Smart IoT and RTU 2-in-1 Terminal (Inc.WxS78xx,PSM-xx0C,PSB-BD01,&Enclosure) |
| WxS780D | Unibus*18+OD*2+PWR*2 | WiFi Smart IoT and RTU 2-in-1 Terminal (Inc.WxS78xx,PSM-xx0D,PSB-BD01,&Enclosure) |
| WxS780E | IIC*1+OD*2+PWR*2 | WiFi Smart IoT and RTU 2-in-1 Terminal (Inc.WxS78xx,PSM-xx0E,PSB-BD01,&Enclosure) |
| WxS780F | SPI*1+OD*2+PWR*2 | WiFi Smart IoT and RTU 2-in-1 Terminal (Inc.WxS78xx,PSM-xx0F,PSB-BD01,&Enclosure) |
| WxS780G | Uart*2+OD*2+PWR*2 | WiFi Smart IoT and RTU 2-in-1 Terminal (Inc.WxS78xx,PSM-xx0G,PSB-BD01,&Enclosure) |
| WxS780H | Uart*3+OD*2+PWR*2 | WiFi Smart IoT and RTU 2-in-1 Terminal (Inc.WxS78xx,PSM-xx0H,PSB-BD01,&Enclosure) |
| WxS780J | Uart*1+RS485+OD*2+PWR*2 | WiFi Smart IoT and RTU 2-in-1 Terminal (Inc.WxS78xx,PSM-xx0J,PSB-BD01,&Enclosure) |
| WxS7850 | Ai/Ao/Di/Pi/Ro/IIC/SPI/Ci + RS232/485/Ro/RJ45 | WiFi Smart RTU |

## Product Highlights

- Interfaces supported:
  - MPI:(AIN(0-20mA)*2, PT100*1, VIN(0-10V/0-3.3V)*2, Switch*1 ,Unibus*1, IIC *1， SPI*1, Uart(3.3V TTL)*2), RS485*1
  - RTU interfaces
    - OD*2 output for external devices controlling
    - PWR*2 output for external devices/sensors power supply or customization usage
- 2-in-1 DC(5V/12V)+Battery(3.6V Li-SOCl2 ER34615H/M) Power Supply, DC in priority
- Up to 8 working simultaneously including sensors and controllers; Customization needed if more than 8 working at the same time
- Built-in sensor options including:
  - PSS-403011 IIC Temperature and Humidity Sensor (Indoor)
  - PSS-403012 RS485 Temperature and Humidity Sensor (Indoor)
  - PSS-403013 IIC Temperature and Humidity Sensor (IP67,Outdoor)
  - PSS-403014 RS485 Temperature and Humidity Sensor (IP67,Outdoor)

- PSS-403015 IIC Temperature and Humidity Sensors (Indoor)
- PSS-403016 RS485 Temperature and Humidity Sensors (Indoor)
- PSS-403017 IIC Temperature and Humidity Sensors (IP67,Outdoor)
- PSS-403018 RS485 Temperature and Humidity Sensors (IP67,Outdoor)
- PSS-403019 IIC Temperature and Humidity Sensors (Indoor)
- PSS-40301A RS485 Temperature and Humidity Sensors (Indoor)
- PSS-40301B IIC Temperature and Humidity Sensors (IP67,Outdoor)
- PSS-40301C RS485 Temperature and Humidity Sensors (IP67,Outdoor)
- PSS-403021 IIC Temperature + Humidity + Barometric Pressure Sensors(Indoor)
- PSS-403022 RS485 Temperature + Humidity + Barometric Pressure Sensors(Indoor)
- PSS-403023 IIC Temperature + Humidity + Barometric Pressure Sensors (IP67,Outdoor)
- PSS-403024 RS485 Temperature + Humidity + Barometric Pressure Sensors (IP67,Outdoor)
- PSS-33B011 RS485 illumination Sensor(Indoor)
- PSS-423011 Uart AQI(PM2.5/10, SO2,NO2, O3, CO,Temp,Humidity) PPM Level Sensors
- PSS-423031 Uart IAQ(PM2.5/10, CO2, HCHO, Temp,Humidity) Sensors
- PSS-423041 Uart IAQ(PM2.5/10, CO2, TVOC, Temp,Humidity) Sensors
- PSS-423051 Uart IAQ(PM2.5/10, CO2, HCHO, TVOC,Temp,Humidity)Sensors
- PSS-318711 Uart GPS/Beidou Positioning Sensor
- PSS-318712 RS485 GPS/Beidou Positioning Sensor
- PSS-319311 0-3.3V Tilt / Inclination Sensor (SHM- Structure Health Monitoring)
- PSS-333051 0-3.3V PIR Sensor (3-4 Meters)
- PSS-333052 0-3.3V PIR Sensor (up to 20 Meters)
- PSS-334061 0-3.3V UV Sensor (Range:0-15 grade, outdoor)
- PSS-355051 Switch Uni-Call Button & Controller
- PSS-362011 Uart Sound/Noise Sensor (30~130dB range, Indoor)
- All Gas Sensors with Product No. PSS-21xxxx

❖ Support 1-8 enclosure externally connected sensors

- All enclosure external PSS sensors w/o separate power supply

❖ RTU OD&PWR(PWM) output control inerfaces

- OD output control interface for controlling external devices such as electric relay,AC contactor, beeper, draught fan, lamps and lantern etc.
- PWR*2 output, one default for external devices/sensors power supply voltage output, one with 3.3V voltage; or customization usage,such as for PWM port
- PWR port signal can be used as PWM output to control stepper moter or lamp
- Sensor(s) data or OTA Command triggered OD/PWR controlling signal&interfaces

❖ Power supply options:

- PSB-BT01 WxS Terminal Battery Power (3.6VDC Output) (3.6V Li-SOCl2 ER34615H/M)
- PSB-BT02 WxS Terminal Battery Power Board (3/5/9/12VDC Output) (3.6V Li-SOCl2 ER34615H/M)
- PSB-DC01 WxS Terminal DC Power Board (Inc. PSP-DC012V)
- PSB-BD01 WxS Terminal Battery (3.6V Li-SOCl2 ER34615H/M) & DC Power Board(Inc. PSP-DC012V)
- Battery capacity ER34615H: 19000mAh/ER34615M: 13500mAh

- iEdge 4.0 terminal enclosure options
  - ENC-102001 WxS Series Standard Enclosure(145x90x55mm)IP67
  - ENC-102002 WxS Series Poromeric Enclosure(145x90x59mm)
  - ENC-102003 WxS Series High Poromeric Enclosure(145x90x70mm)
- Terminal and sensor parameters configurable with Configuration Tool running on PC
  - WiFi Bands Supported and SW Configurable
  - WiFi Uplink Transmission Cycle Configurable
  - Sensor Parameters Configurable
  - Sensor Data Report Cycle Configurable
- FOTA (Over The Air) firmware upgrade, including to upgrade loader and application images
- OTA (Over The Air) terminal running parameters supported including output signal
- Low power consumption, years of battery operational life with 3.6V Li-SOCl2 ER45615H/M Battery with various scenarios
- Integrated internal antenna, or optional external SMA/IPEX antenna
- WiFi Compliance

## Specifications

| Parameters | Value |
|---|---|
| **Smart Terminal** | |
| Interfaces | MPI Interfaces-Any Mixture of Following:<br>MPI:(AIN(0-20mA) *2, PT100 *1, VIN(0-10V/0-3.3V) *2, Switch *1 ,Unibus*1, IIC *1， SPI*1, Uart(3.3V TTL)*2), RS485*1<br>Output Control: OD*2&PWR*2 |
| Data Report | Cross-threshold report, plus periodic report (the threshold and the periodic report cycle are both user-configurable) |
| Intensive data sampling and averaging | Support intensive data sampling and averaging to improve data accuracy |
| **Wireless** | |
| Wireless standards | 802.11 b/g/n |
| output power | +20 dBm in 802.11b mode |
| frequency range | 2.4GHz-2.5GHz (2400M-2483.5M) |
| Data connection | UART/HSPI/I2C/I2S/Ir Remote Contorl |
| Wireless network mode | station/softAP/SoftAP+station |
| Network Protocol | IPv4, TCP/UDP/HTTP/FTP |
| Power | Power consumption in standby mode is less than 1.0 mW (DTIM3) |
| Antenna | Integrated internal antenna or external 1/2 wavelength whip antenna (SMA) |
| **Mechanical** | |
| Dimension | 3 Enclosure options with different size<br>WxS Series 4.0 Enclosure(ϕ145x90x55mm, IP67)<br>WxS Series 4.0 Poromeric Enclosure(ϕ145x90x59mm)<br>WxS Series 4.0 High Poromeric Enclosure(ϕ145x90x70mm) |
| IP rating | IP65&IP67 |

| | |
|---|---|
| Operating Temperature | -40C to +85C |
| Total Weight | 150 g |
| **Electrical** | |
| Supply Voltage | 3.6VDC |
| Power Type | Replaceable 1 ER34615H/M 3.6V Li-SOCI2 Battery (H/M); DC 4.5V – 12V optional |

## Configuration Tool

- iEdge4.0 WxS IoT Terminal products can be configured with PolySuite software-visual based Configuration Tool or CLI interface command or OTA via IoT platform, such as PolySuite PaaS platform iView.
- Download link[http://ota.polysense.online/wincc/ConfigurationTool.rar](http://ota.polysense.online/wincc/ConfigurationTool.rar)

## Installation Guide

- Below diagram shows the general installation guide for WxS7800, it can be installed on any flat and solid surface:

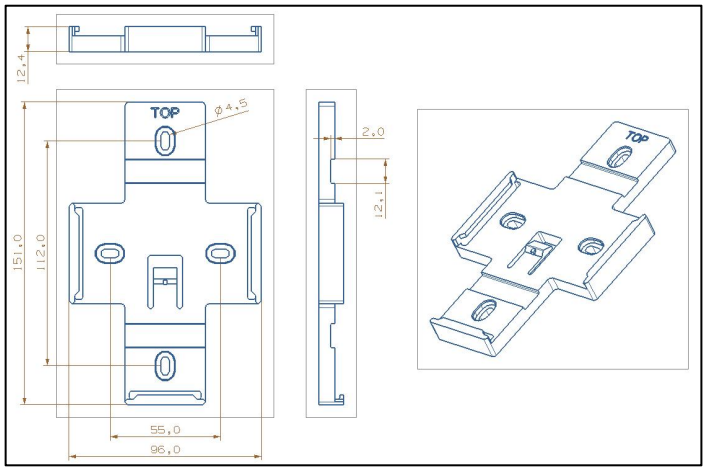

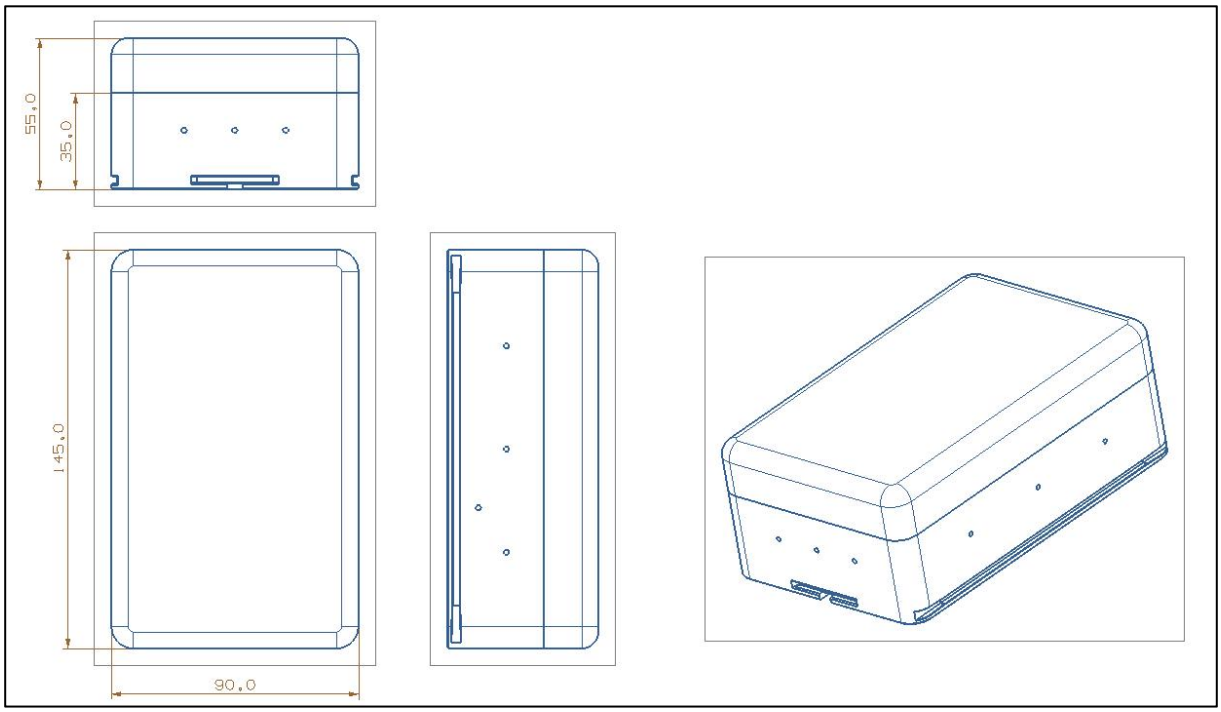
55.0
35.0
145.0
90.0

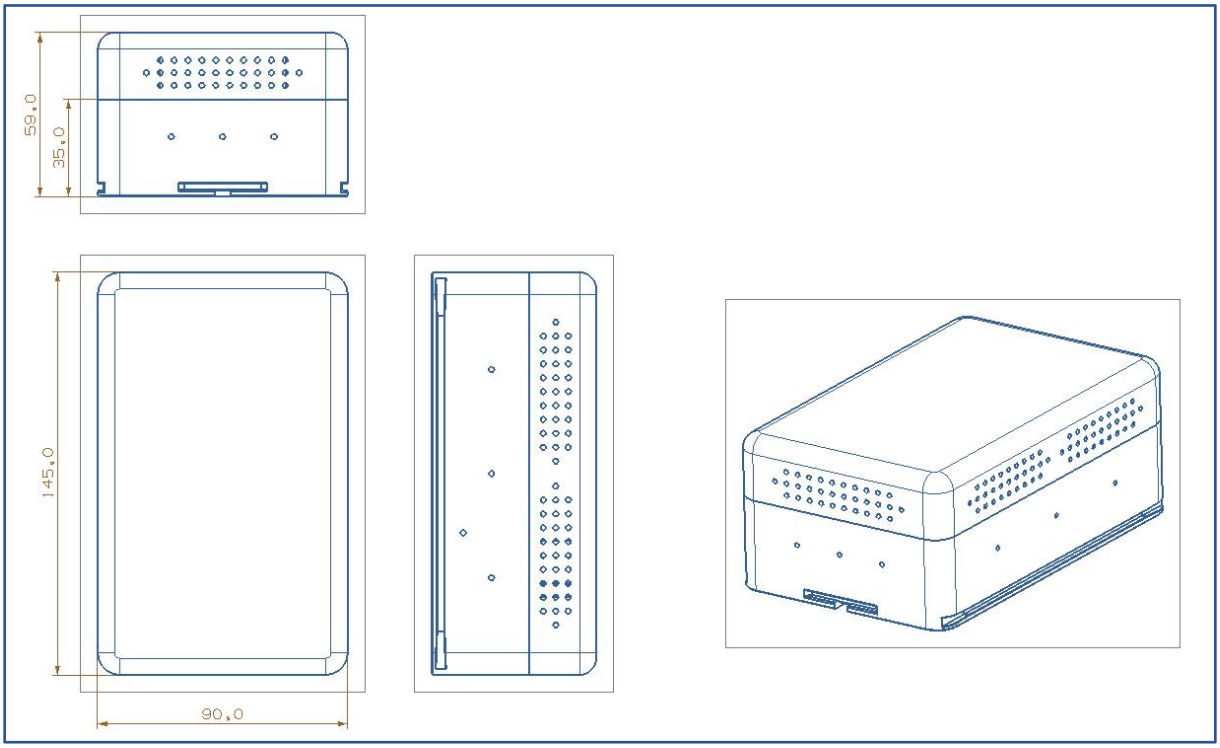
59.0
35.0
145.0
90.0

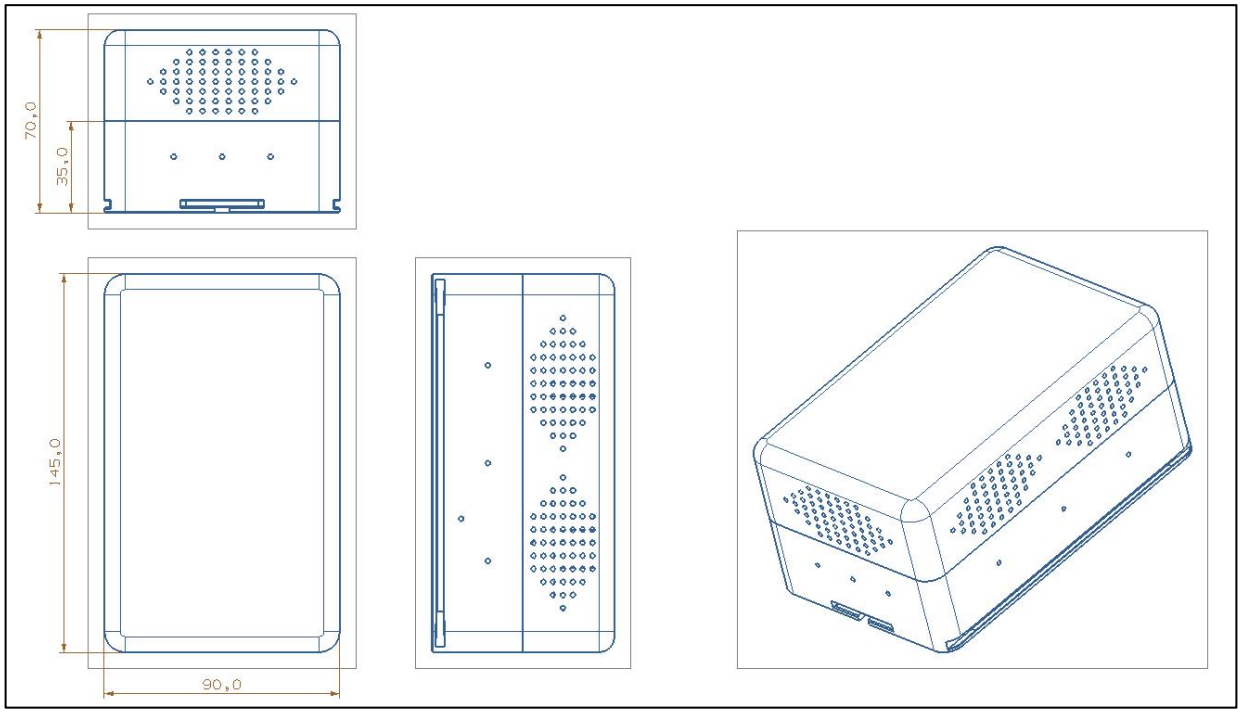


❖ Below is the recommendation of the self-tapping screw and its sizes:

| 螺纹规格 | | ST2.2 | ST2.9 | ST3.5 | ST4.2 | ST4.8 | ST5.5 | ST6.3 |
|---|---|---|---|---|---|---|---|---|
| dk | min | 3.7 | 5.3 | 6.64 | 7.64 | 9.14 | 10.57 | 11.57 |
| K | min | 1.4 | 2.15 | 2.35 | 2.8 | 3.4 | 3.7 | 4.3 |
| m | | 1.9 | 3 | 3.9 | 4.4 | 4.9 | 6.4 | 6.9 |
| L | | 4.5mm~100mm | | | | | | |

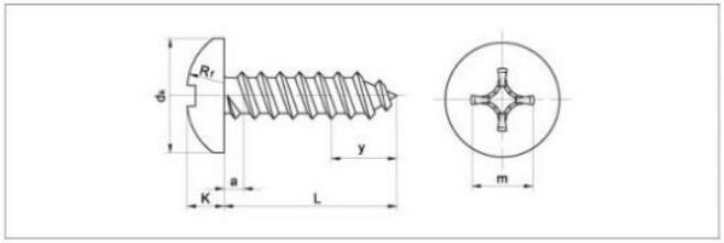

## Product Images

❖ WxS Series 4.0 Enclosure(ϕ145x90x55mm, IP67)

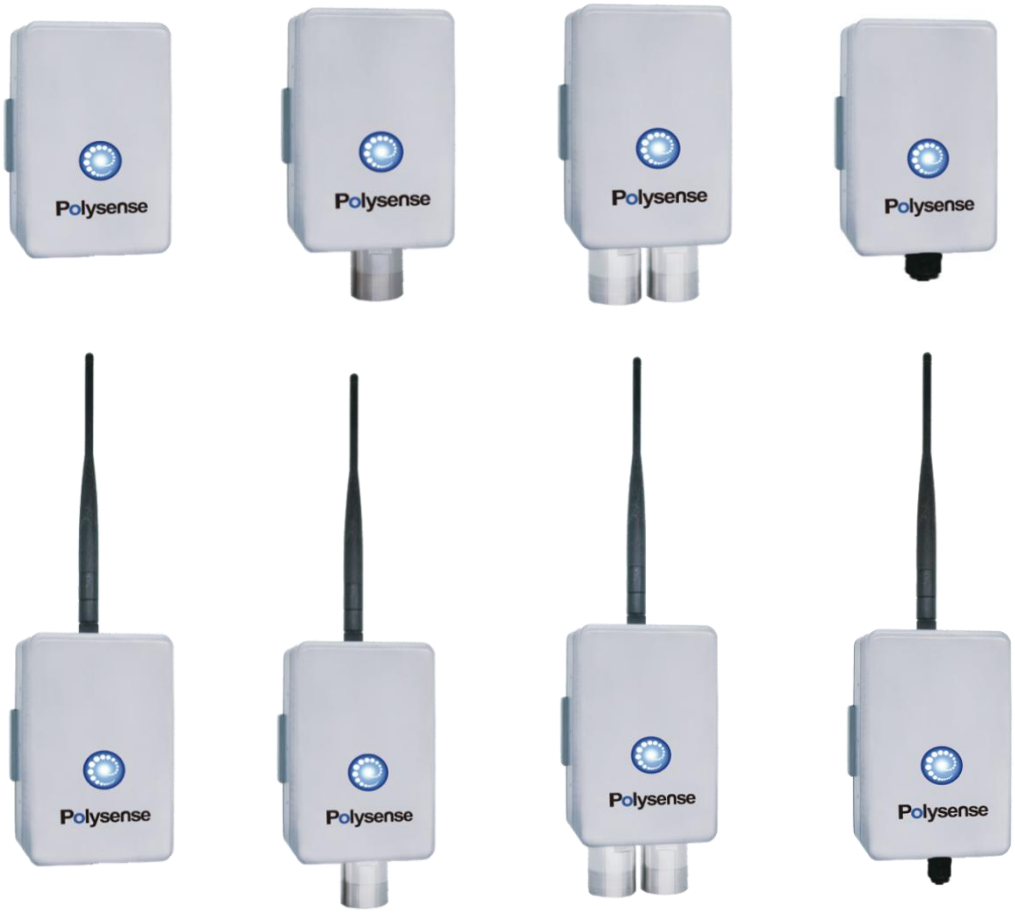

❖ WxS Series 4.0 Poromeric Enclosure(ϕ145x90x59mm)

❖ WxS Series 4.0 High Poromeric Enclosure(ϕ145x90x70mm)

# PSS-319211

Wind Direction Sensor

## Product introduction

PSS-319211 the wind direction sensor is small and light in appearance, easy to carry and assemble. The three-cup design concept can effectively obtain external environmental information. The shell is made of a high-quality aluminum alloy profile, and the outside is electroplated and sprayed with plastic. It has good anti-corrosion, anti-corrosion, and other characteristics, which can ensure that the instrument can be used without rust for a long time, and cooperate with the internal smooth bearing system, It ensures the accuracy of information collection and is widely used for wind speed measurement in a greenhouse, environmental protection, weather station, ship, wharf, aquaculture, and other environments.

## Detection principle

The Hall angle sensor is used internally, and the low inertia light metal wind vane is selected to respond to the wind direction. When the wind direction changes, the tail rotates and drives the core magnet to rotate through the shaft rod, so as to output the changing voltage signal.

## Product features

- 16 direction values of wind can be monitored
- Low power consumption, equipment power supply 3.3V
- Small size, easy to carry, simple installation and beautiful appearance
- Strong corrosion resistance and weather resistance
- Strong anti-interference ability, able to work stably for a long time
- Wide power supply adaptation range, good data information linearity, and long signal transmission distance

## Product parameters

| | |
|---|---|
| **Sensor** | |
| Measuring range | 16 directions |
| Dynamic response speed | ≤0.5s |
| Load capacity | Output resistance ≤ 250 Ω (voltage output)<br>≤ 600 Ω (current output) |
| **Interface** | |
| Output signal | 4 ~ 20mA (current output)<br>0 ~ 2V / 0 ~ 5V / 0 ` 10V (voltage output) |
| **Warranty** | |
| Warranty period | 1year |
| **Mechanics** | |
| Size | Overall height: 155mm<br>Spindle height: 100mm<br>Overall width: 230mm<br>Base diameter: 65mm |
| Working temperature | -20℃~60℃ |

| | |
|---|---|
| Working humidity | 0%RH~80%RH |
| **Power** | |
| Power | 3.6V |

## Application

The wind direction sensor can trace the wind and adopts the mechanical structure of the wind vane. When the wind blows to the tail of the wind vane, the arrow of the wind vane will point to the direction of the wind. It is widely used in aquaculture meteorological monitoring, airport environmental monitoring, and agricultural meteorological monitoring and so on.

## Ordering Guide

- PSS-319211 sensor is a sensor only, it needs to use with WxS terminals to combine to different product series; On the basis of the combination, multiple PSS sensors can be loaded through the Multiple Purpose Interface (MPI) of the intelligent IoT terminal.
- According to the specific scenario of use case, the enclosure and antenna of intelligent IoT terminal will be replaced to ensure the product quality and performance.
- PSS sensors can be integrated with the WxS terminal via the MPI interface to form different product series.
- Example of products are as follows:

  - WxS7800-319211 WiFi Series wind direction Smart Sensor & RTU 2-in-1 Terminal
  - WxS8800-319211 LoRaWAN Series wind direction Smart Sensor & RTU 2-in-1 Terminal
  - WxS9800-319211 NB-IoT (China) Series wind direction Smart Sensor & RTU 2-in-1 Terminal
  - WxS9900-319211 NB-IoT (Global) Series wind direction Smart Sensor & RTU 2-in-1 Terminal
  - WxSC800-319211 LTE Cat1 Series wind direction Smart Sensor & RTU 2-in-1 Terminal
  - WxSC900-319211 LTE Cat1 w/GPS Series wind direction Smart Sensor & RTU 2-in-1 Terminal
  - WxSD800-319211 LTE Cat4 Series wind direction Smart Sensor & RTU 2-in-1 Terminal
  - CxS1800-319211 Ethernet (RJ45) Series wind direction Smart Sensor & RTU 2-in-1 Terminal